Oilgear

PVWJ Open Loop Pumps

Bulletin 47085

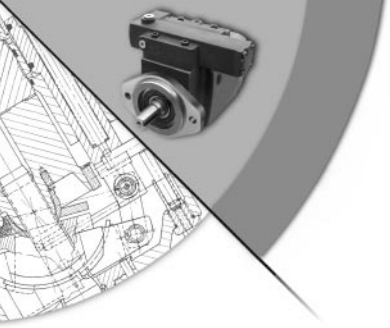

Table of Contents

Performance Assurance	page 3
Features and Benefits	4
Specifications	5-6
Dimensions and Weights	7-8
Pressure Pick-ups	9
Controls	
Pressure Compensator	10
Soft Start Pressure Compensator	10
Volume Pressure Sensing	11
Remote Controls	12
Performance Curves	
Efficiency, Delivery, Horsepower	13-15
Sound	16-18
Inlet Suction/Supercharge	19-21
Ordering Information	22

Copyright 2006 ■ The Oilgear Company ■ All Rights Reserved

PERFORMANCE ASSURANCE –
STANDARD WITH EVERY OILGEAR PUMP

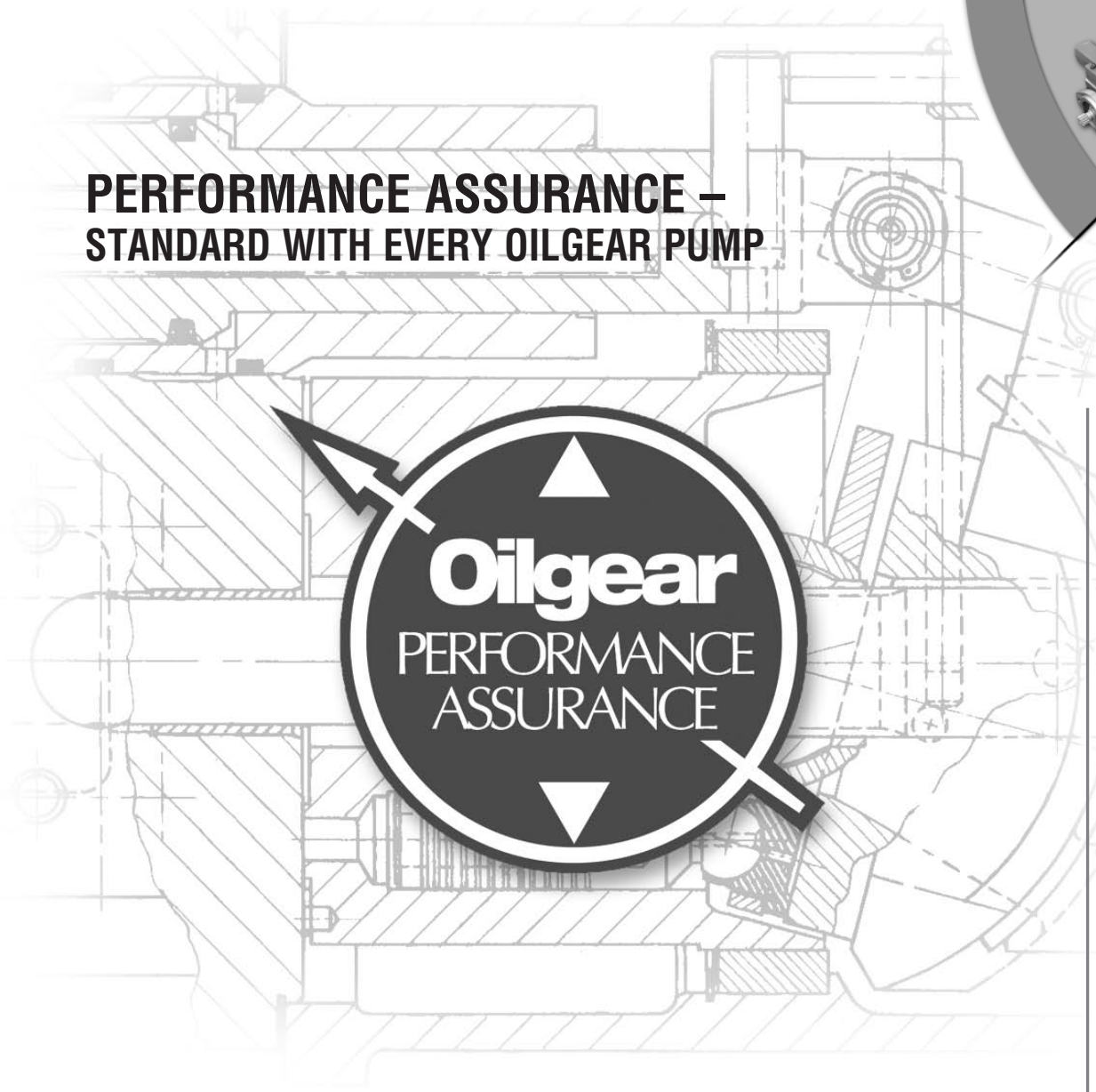

PVWJ Open Loop Pumps

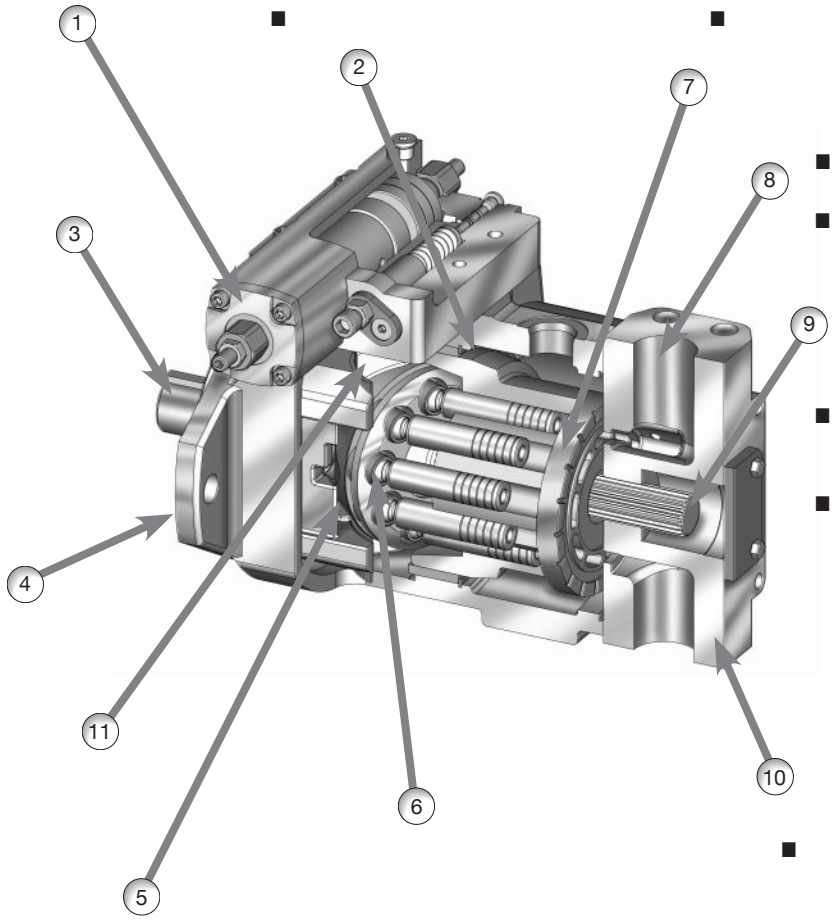

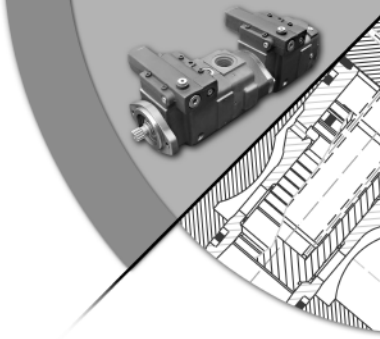

SPECIFICATIONS

SINGLE PUMP

Based on 150 – 300 ssu viscosity fluid

FRAME SIZE	UNIT SIZE	THEORETICAL MAXIMUM DISPLACEMENT		RATED CONTINUOUS PRESSURE		MAXIMUM PRESSURE		FLOW RATE at 1800 rpm, rated continuous pres. & 14.7 psia (1.0 bar) inlet condition		MINIMUM INLET PRESSURE* psia (bar)			MAXIMUM SPEED*	POWER INPUT at rated cont. pres. & 1800 rpm	
		in^3/rev	ml/rev	psi	bar	psi	bar	gpm	l/min	1200rpm	1500rpm	1800rpm	rpm	hp	kw
A	011	0.66	10,8	5000	344,8	5800	400,0	4.2	15,9	5.4 (,37)	5.7 (,39)	6.1 (,42)	3000	16.3	12,2
	014	0.86	14,1	4000	275,9	4500	310,3	5.9	22,4	5.5 (,38)	5.9 (,41)	6.4 (,44)	3000	17.7	13,2
	022	1.35	22,1	3000	206,9	3500	241,4	9.5	36,0	5.5 (,38)	6.0 (,41)	7.0 (,48)	3000	20.2	15,1
B	025	1.55	25,4	5000	344,8	5800	400,0	10.9	41,3	7.0 (,48)	7.3 (,50)	8.2 (,57)	3000	36.5	27,2
	034	2.06	33,8	3500	241,4	4000	275,9	14.7	55,7	7.0 (,48)	7.6 (,52)	8.4 (,58)	3000	35.5	26,5
	046	2.83	46,4	2500	172,4	3000	206,9	20.6	78,1	7.2 (,50)	7.9 (,54)	9.0 (,62)	2400	35.0	26,1
C	064	3.88	63,6	5000	344,8	5800	400,0	27.4	103,8	7.6 (,59)	8.5 (,59)	9.5 (,66)	2400	95.1	70,9
	076	4.67	76,5	3500	241,4	4000	275,9	33.7	127,7	8.0 (,55)	8.6 (,59)	9.6 (,66)	2400	80.4	60,0
	098	6.00	98,3	2500	172,4	3000	206,9	43.3	164,1	7.6 (,52)	8.6 (,59)	9.8 (,68)	2400	74.1	55,3
	130	7.94	130,2	1500	103,4	2000	137,9	58.2	220,3	8.0 (,55)	9.3 (,64)	14.5 (1,00)	1800	64.0	48,8

* For higher speeds, see Suction Curves on pages 19-21.
Higher speeds available – consult factory.
These units are designed to run with fluids in the 65 to 2000 SSU range.

Note: Minimum speed 600 rpm.

THRU-SHAFT SIZING/COMPATIBILITY

PISTON PUMP FRAME SIZE	PUMP SIZE	INPUT TORQUE								ALLOWABLE THRU-SHAFT TORQUE	
		RATED PRESSURE		INPUT TORQUE (T_R) @ RATED PRESSURE		PEAK PRESSURE		INPUT TORQUE @ PEAK PRESSURE			
		psi	bar	in-lb	Nm	psi	bar	in-lb	Nm	in-lb	Nm
A	011	5000	344,8	570.7	64,3	5800	400,0	662.0	74,6	1290	145,1
	014	4000	275,9	612.7	70,0	4500	310,3	689.3	77,6		
	022	3000	206,9	717.8	80,8	3500	241,4	837.4	94,3		
B	025	5000	344,8	1306.0	147,1	5800	400,0	1515.0	170,6	2250	253,1
	034	3500	241,4	1278.0	143,9	4000	275,9	1460.6	165,5		
	046	2500	172,4	1243.0	140,0	3000	206,9	1450.2	163,3		
C	064	5000	344,8	3263.3	367,5	5800	400,0	3785.3	426,3	6400	720,0
	076	3500	241,4	2871.1	323,3	4000	275,9	3281.3	369,5		
	098	2500	172,4	2661.0	299,7	3000	206,9	3104.5	349,6		
	130	1500	103,4	2100.8	236,6	2000	137,9	2801.1	315,4		

ACTUAL INPUT TORQUE CALCULATION

$$T_A = T_R \times \frac{\text{ACTUAL OPERATING PRESSURE}}{\text{RATED PRESSURE}} \times \frac{\text{\% FULL DELIVERY}}{100\%}$$

SINGLE PUMP

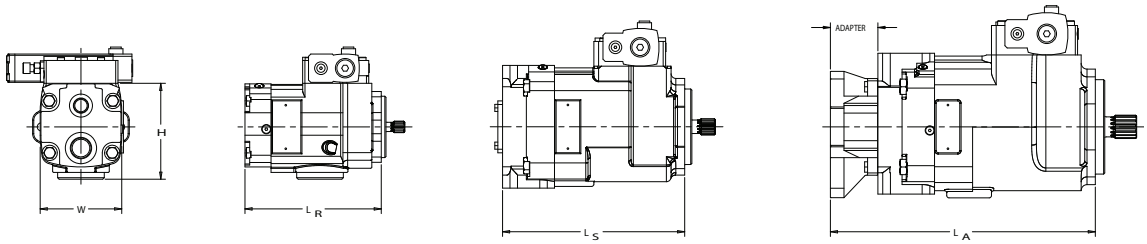

DIMENSIONS and WEIGHTS W/O CONTROLS

FRAME SIZE	PVWJ PUMP SIZE	HEIGHT		WIDTH		LENGTH						WEIGHT	
		H		W		L_R		L_S		L_A		SINGLE PUMP W/REAR PORTS	
		inch	mm	inch	mm	inch	mm	inch	mm	inch	mm	lb	kg
A	011, 014, 022	4.50	114,3	4.32	109,7	7.20	182,9	9.62	244,3	10.94	277,9	32	14,5
B	025, 034, 046	6.11	155,2	5.80	147,3	8.50	215,9	9.63	244,6	12.36	313,9	68	30,9
C	064, 076, 098, 130	7.18	182,4	6.76	171,7	10.44	265,2	11.50	292,1	14.00	355,6	103	46,8

Length Example:

STANDARD AUXILIARY GEAR PUMPS

DIMENSIONS and WEIGHTS

GEAR PUMP SIZE	LENGTH L_G		WEIGHT	
	inch	mm	lb	kg
05	3.74	95,0	8.1	3,7
07	3.91	99,4	8.4	3,8
10	4.20	106,8	9.0	4,1
14	4.61	117,2	9.6	4,4
20	6.56	161,6	20.1	9,1

Spline Key Driven (Add to LA)

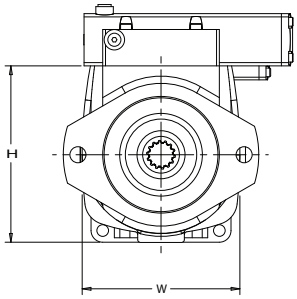

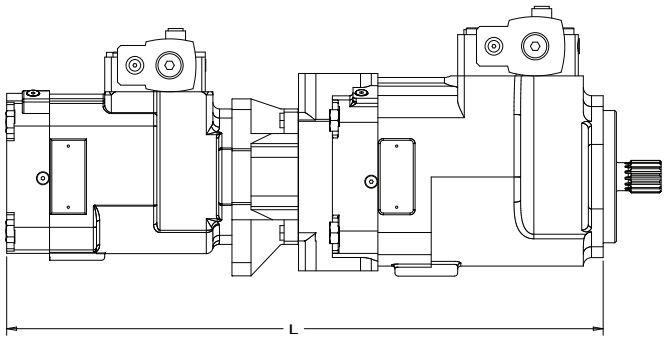

DIMENSIONS and WEIGHTS W/O CONTROLS

FRAME SIZE	PVWJ DUAL PUMP SIZES	H HEIGHT		W WIDTH		L LENGTH		WEIGHT	
		inch	mm	inch	mm	inch	mm	lb	kg
A/A	011, 014 or 022 & 011, 014 or 022	4.50	114,3	4.32	109,7	18.12	460,2	72	33
B/A	025, 034 or 046 & 011, 014 or 022	6.11	155,2	5.80	147,3	19.56	496,8	108	49
B/B	025, 034 or 046 & 025, 034 or 046	6.11	155,2	5.80	147,3	20.86	529,8	144	66
C/A	064, 076, 098 or 130 & 011, 014 or 022	7.18	182,4	6.76	171,7	21.20	538,5	143	65
C/B	064, 076, 098 or 130 & 025, 034 or 046	7.18	182,4	6.76	171,7	22.50	571,5	179	82
C/C	064, 076, 098 or 130 & 064, 076, 098 or 130	7.18	182,4	6.76	171,7	24.44	620,8	214	97

Length Example:

PRESSURE PICK-UP POINTS FOR INSTRUMENTATION

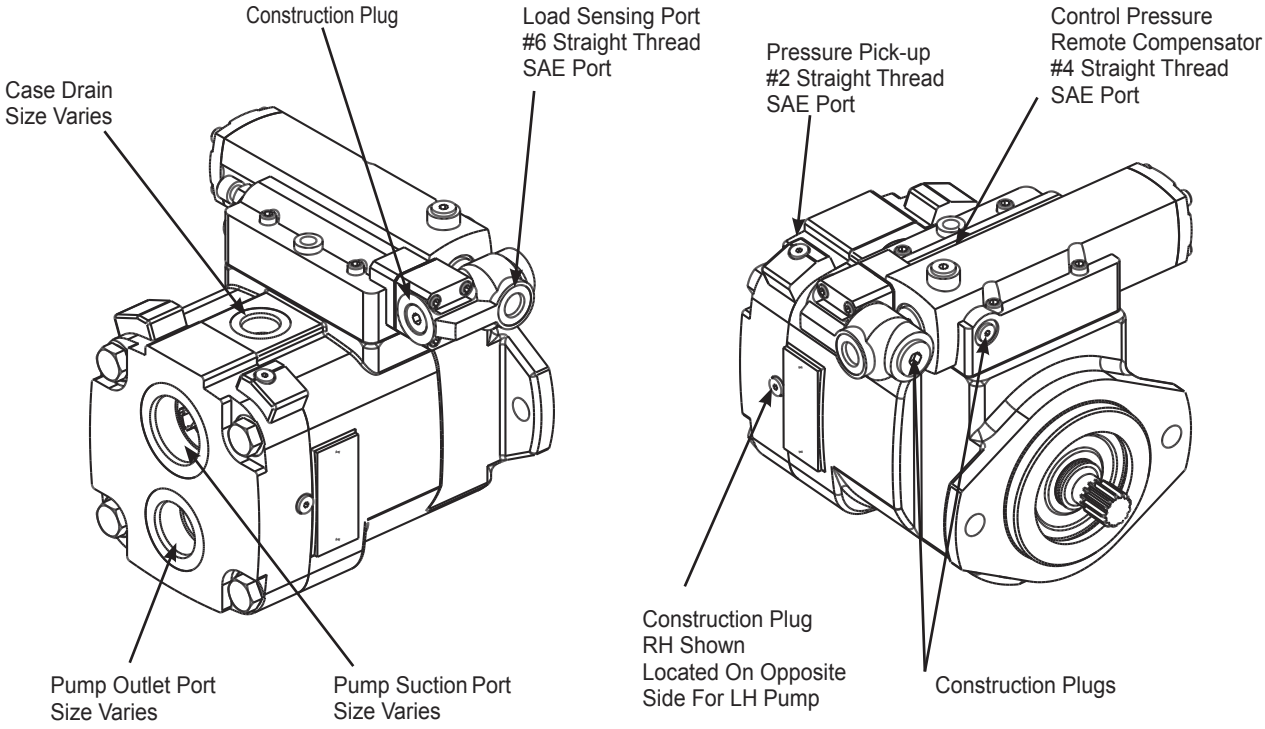

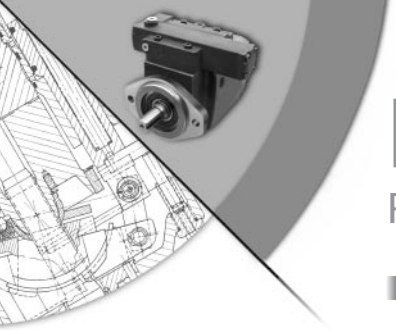

Pump Controls

PRESSURE*

Pressure Compensator "P-1NN"

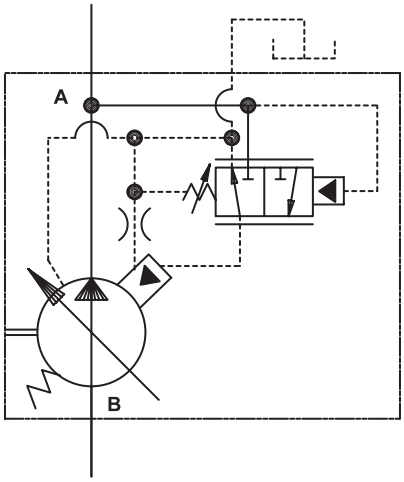

Low Pressure Compensator "P-LNN"

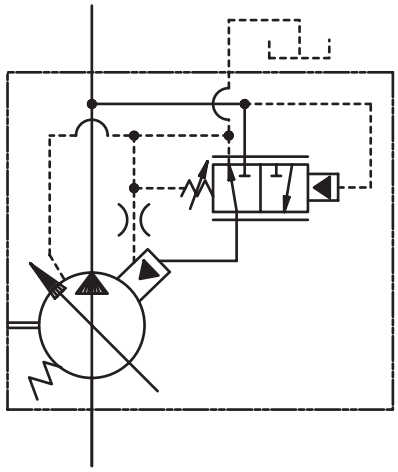

Soft Start Pressure Compensator "P-KNN"

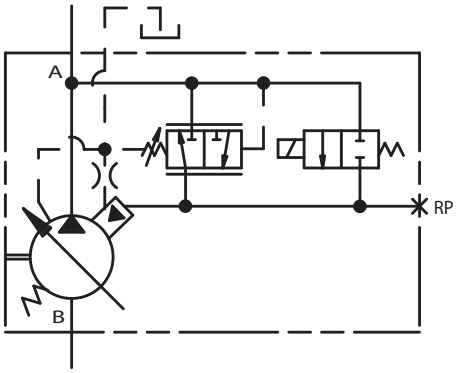

(N.C.)

Soft Start Pressure Compensator "P-CNN"

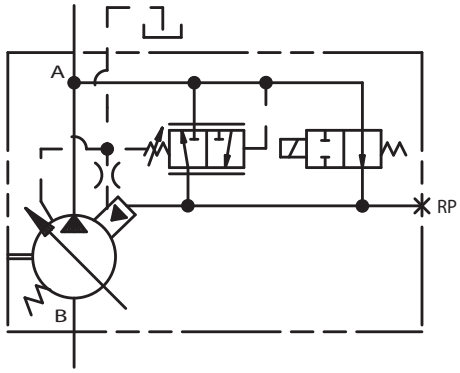

(N.O.)

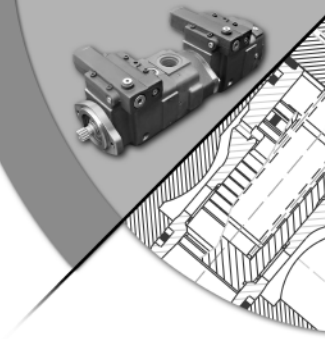

Fixed Load Sense w/Pressure Compensator "P-1NN/F"

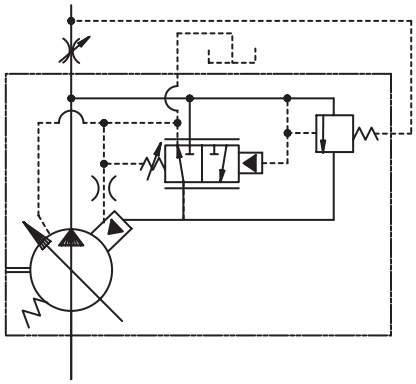

Fixed Load Sense w/Low Pressure Compensator "P-LNN/F"

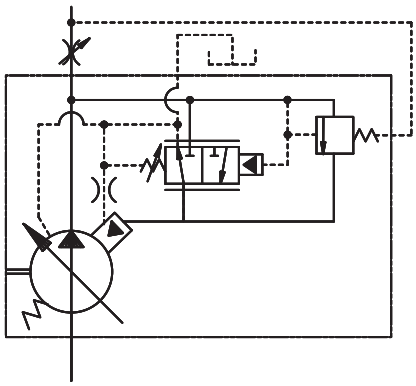

Remote Operator For "P-1NN," "P-LNN," "P-CNN," & "P-KNN"

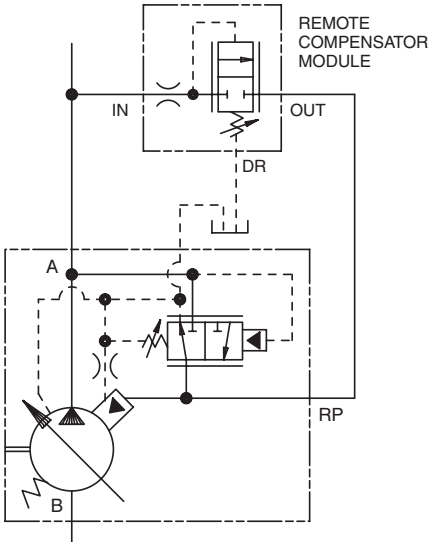

Adjustable Load Sense w/Pressure Compensator "P-1NN/J" & "P-1NN/K"

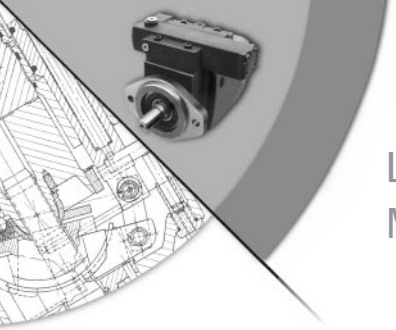

LINE MOUNTED REMOTE PRESSURE CONTROL FOR SINGLE & MULTIPLE PUMPS

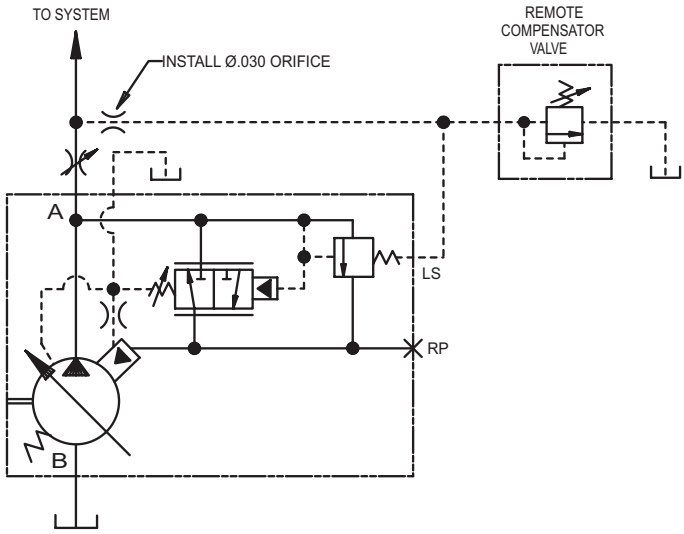

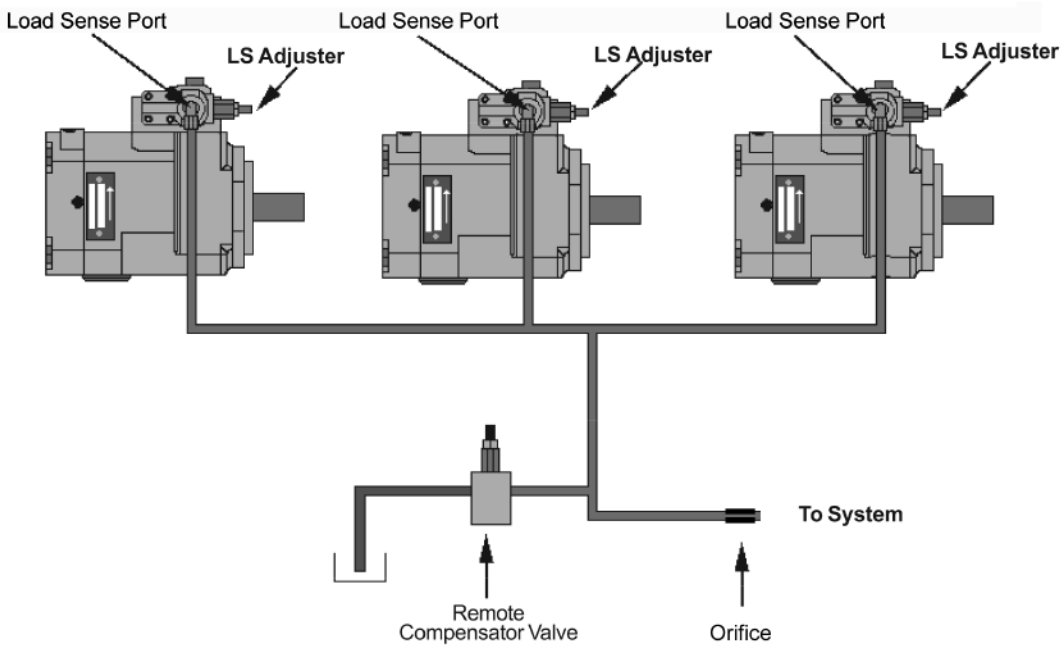

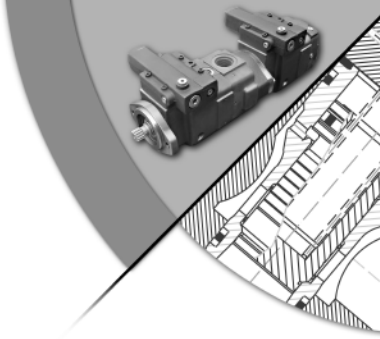

Frame Size A

PVWJ-011

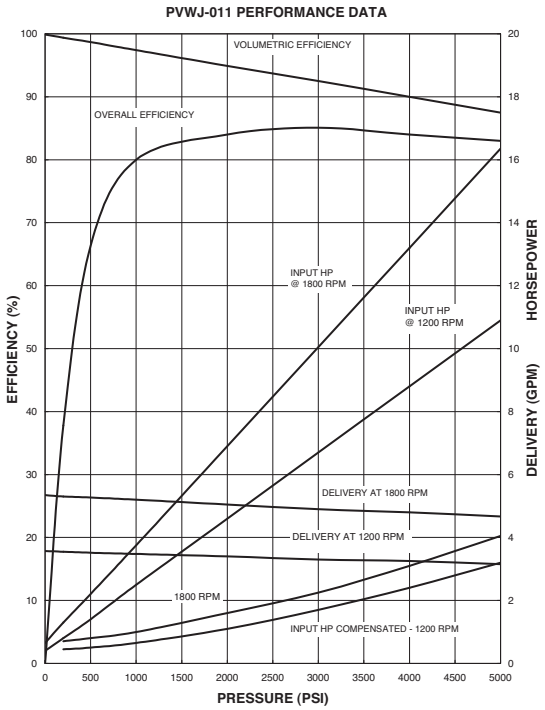

PVWJ-014

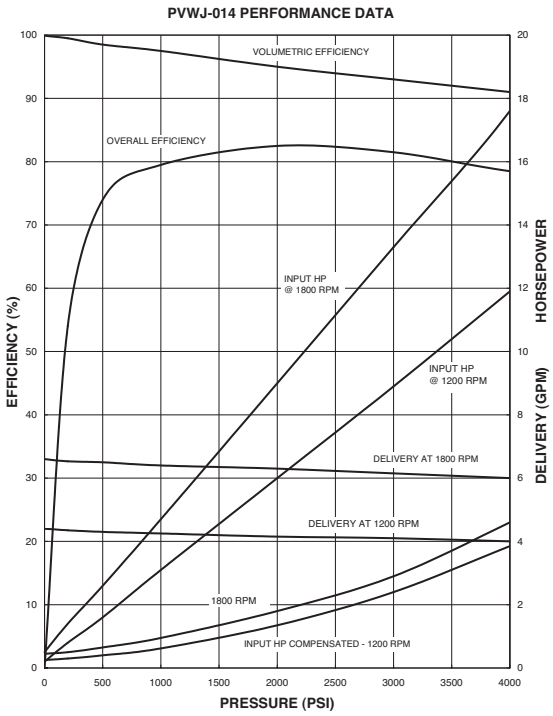

PVWJ-022

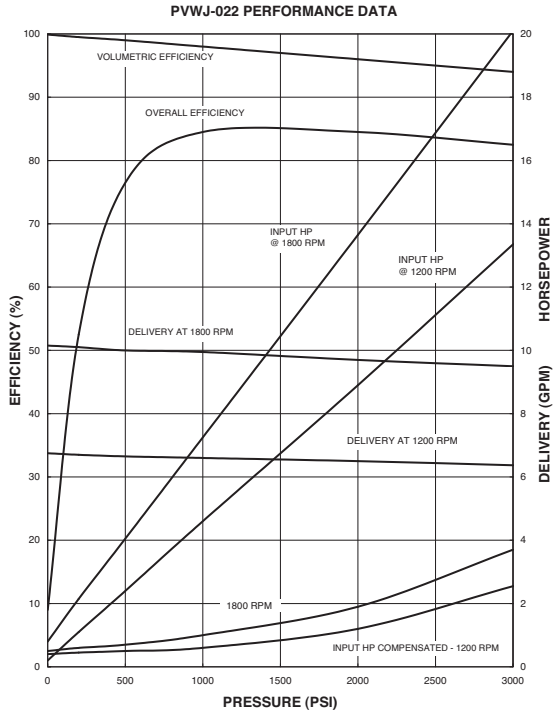

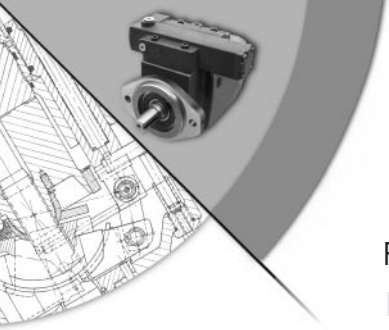

Frame Size B

PVWJ-025

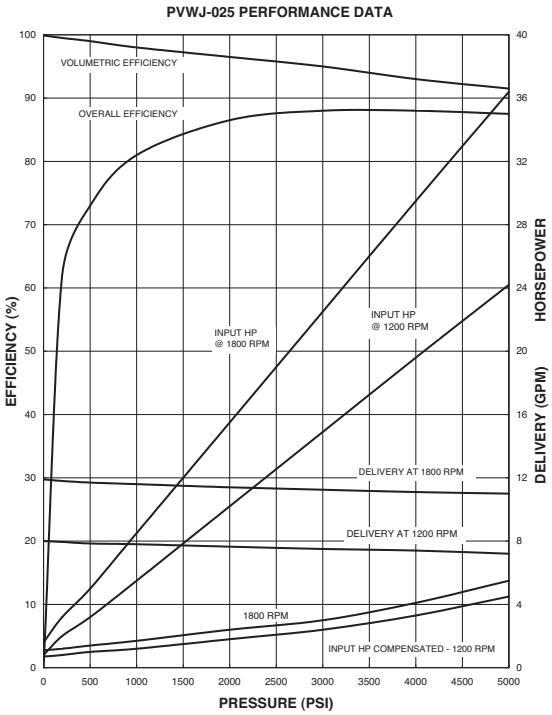

PVWJ-034

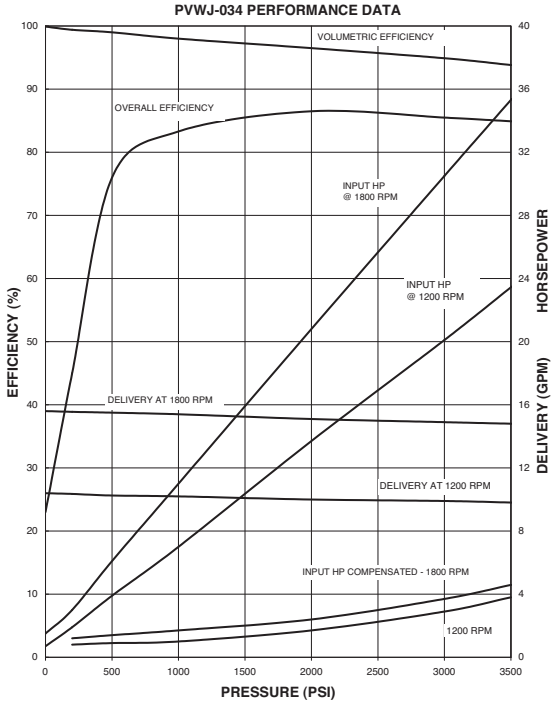

PVWJ-046

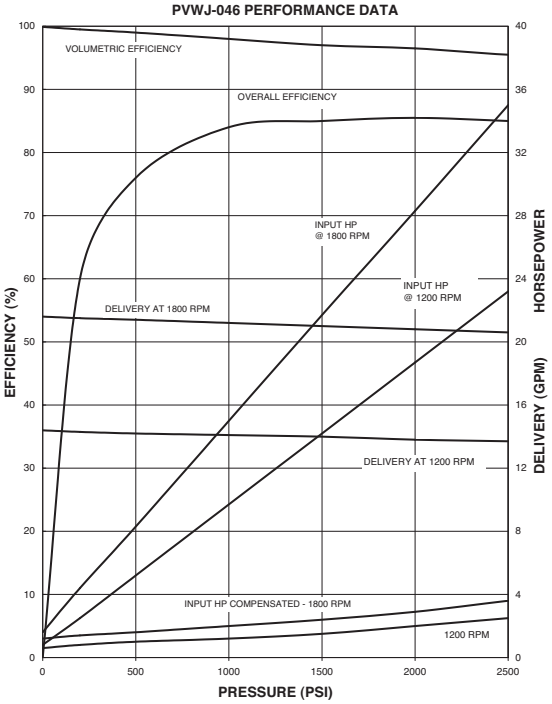

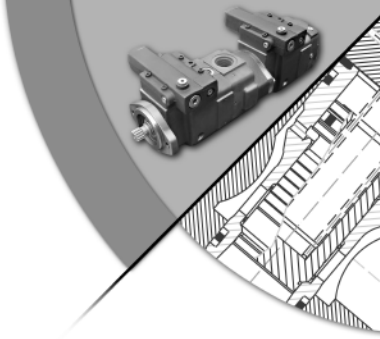

Frame Size C

PVWJ-064

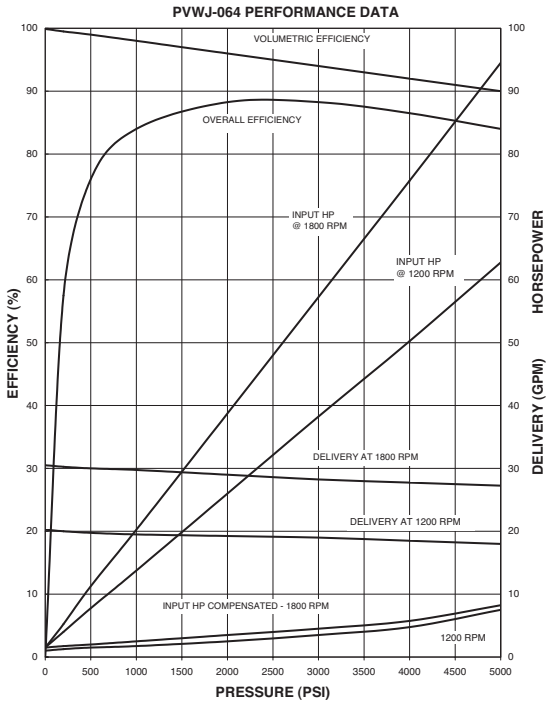

PVWJ-076

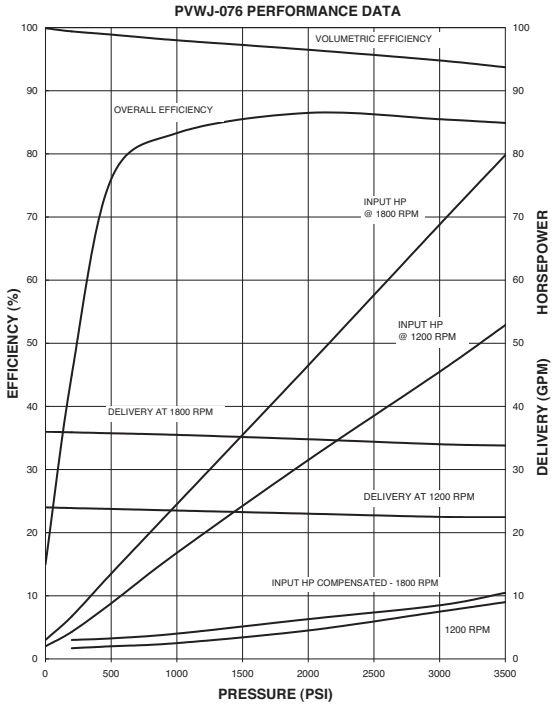

PVWJ-098

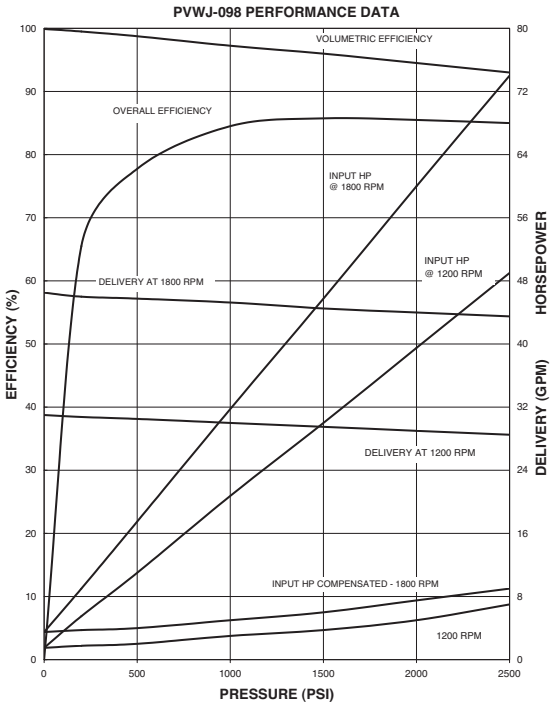

PVWJ-130

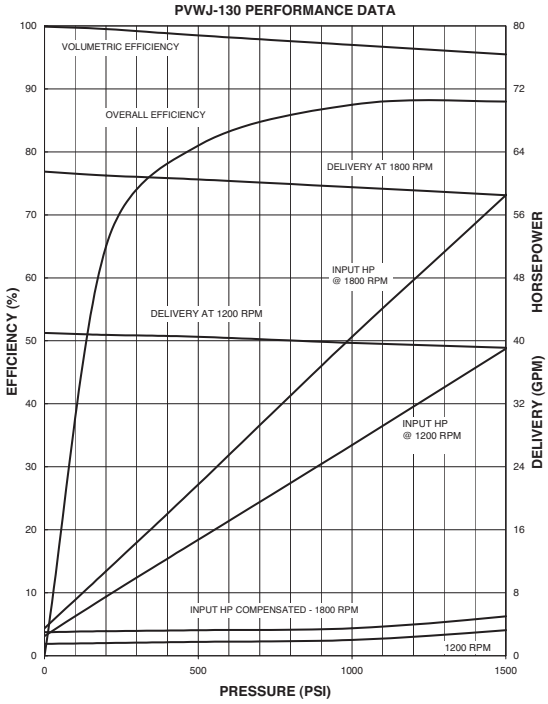

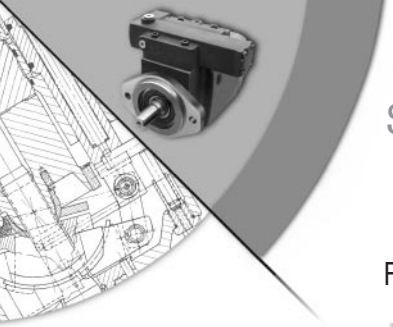

Frame Size A

PVWJ-011–FULL STROKE

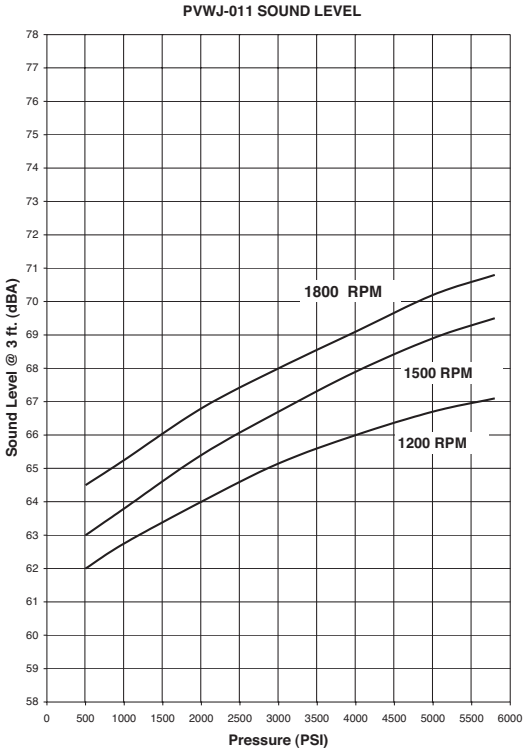

PVWJ-014–FULL STROKE

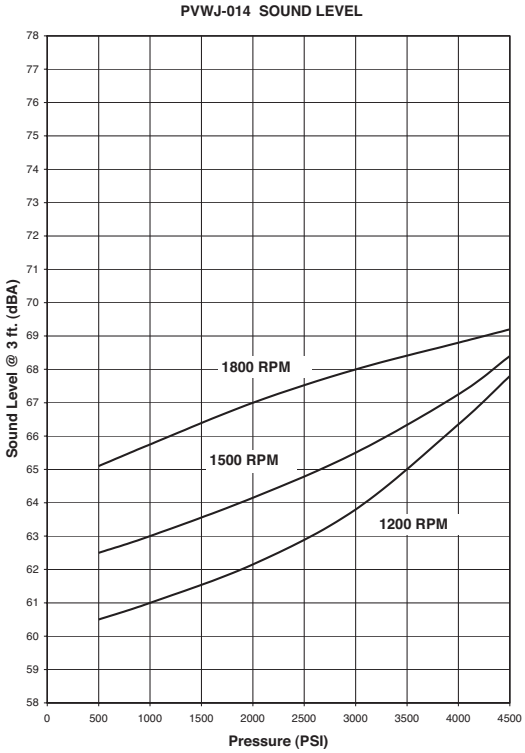

PVWJ-022–FULL STROKE

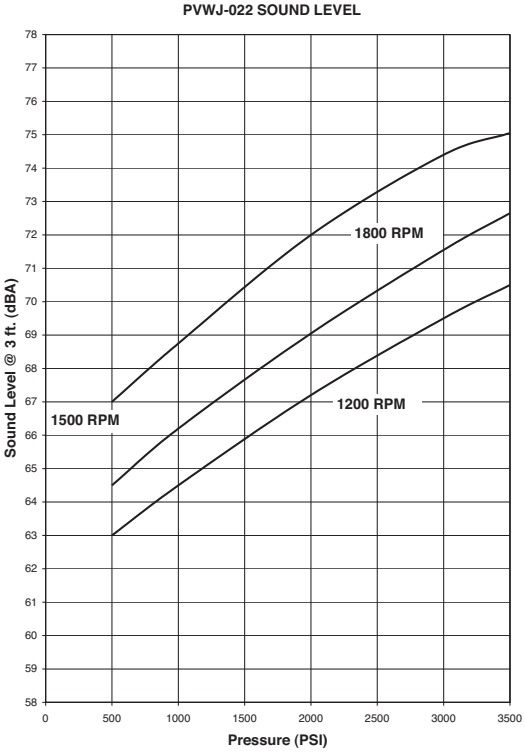

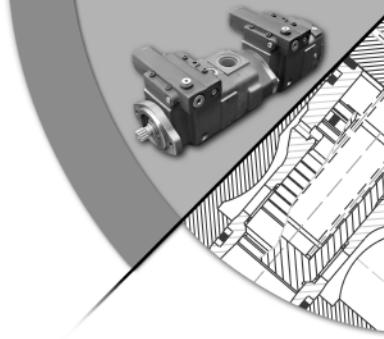

Frame Size B

PVWJ-025–FULL STROKE

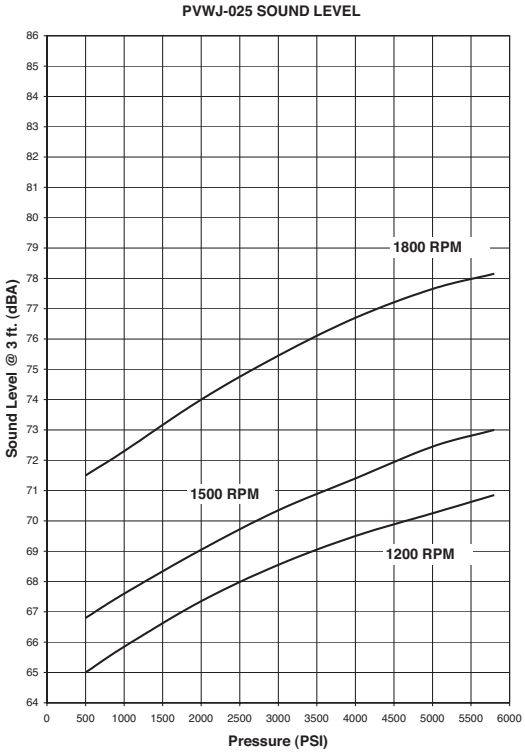

PVWJ-034–FULL STROKE

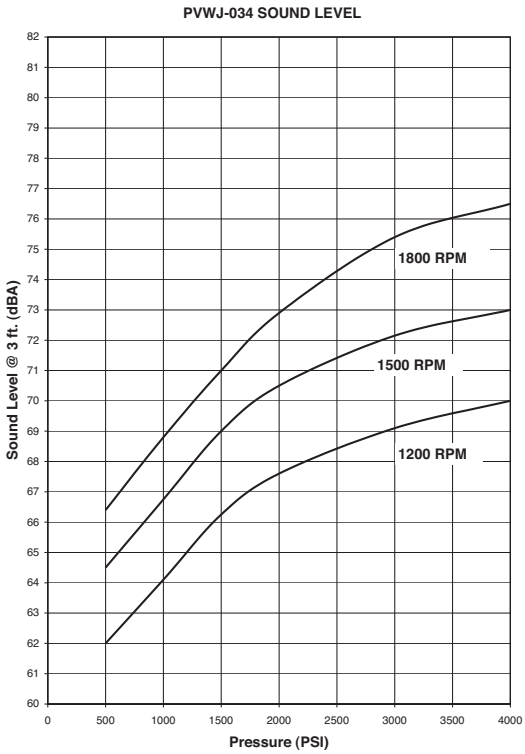

PVWJ-046–FULL STROKE

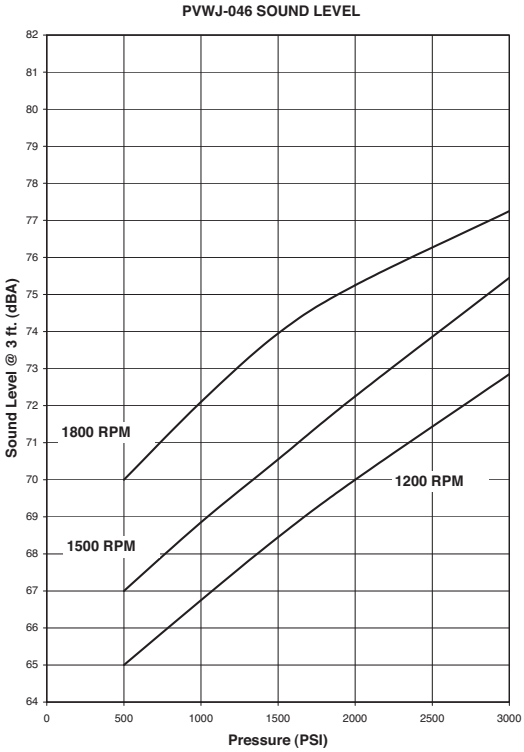

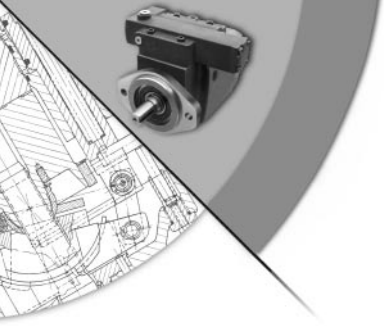

Frame Size C

PVWJ-064–FULL STROKE

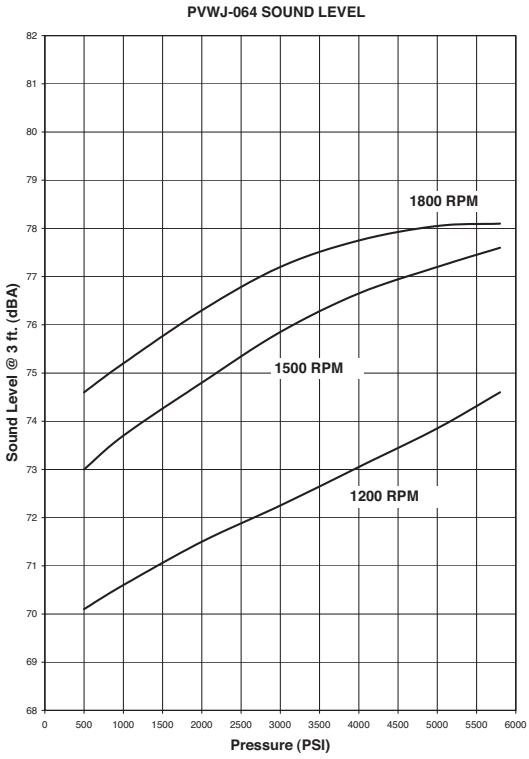

PVWJ-076–FULL STROKE

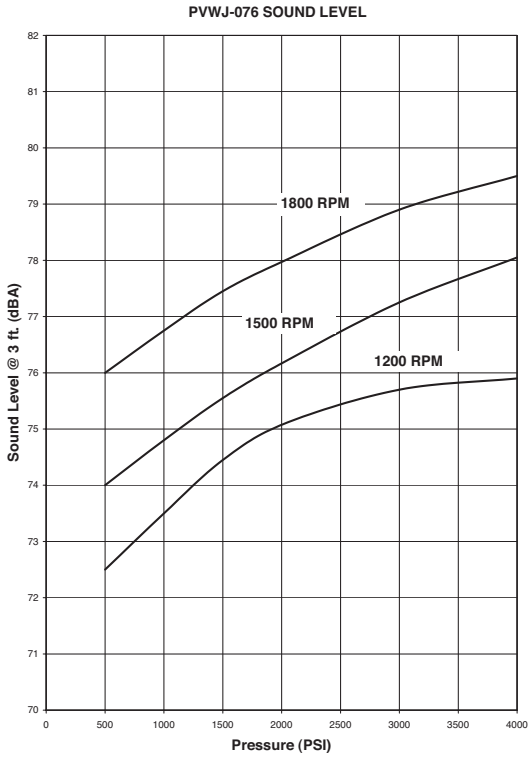

PVWJ-098–FULL STROKE

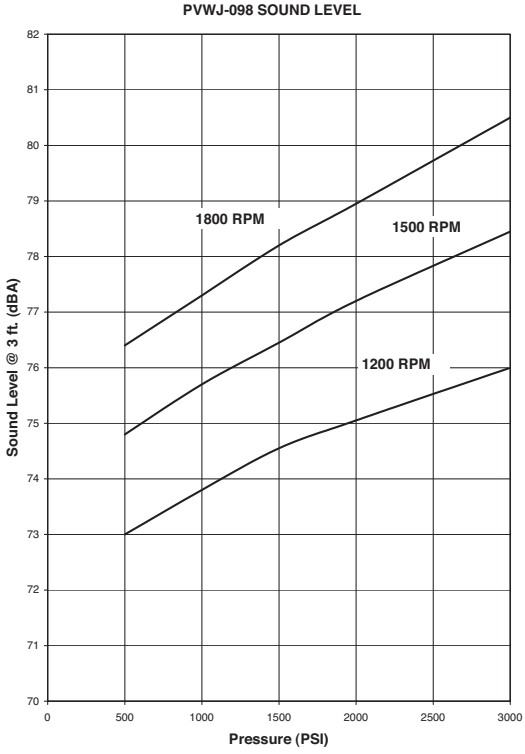

PVWJ-130–FULL STROKE

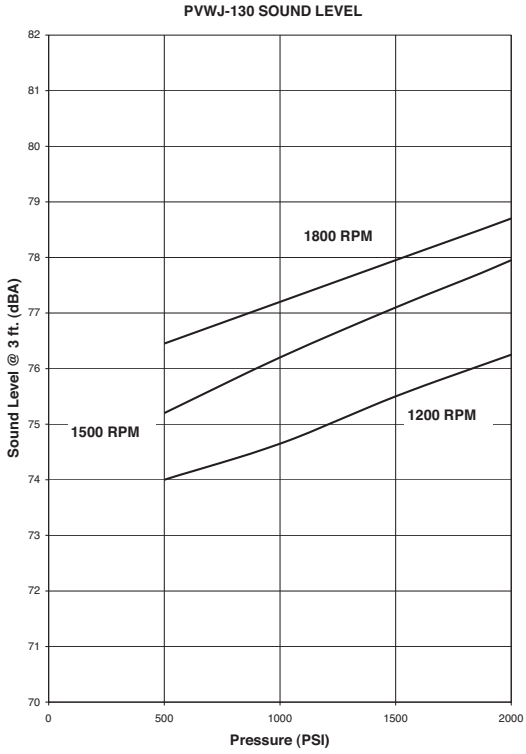

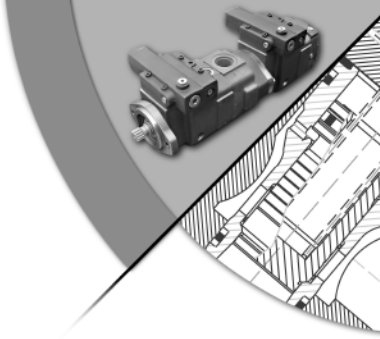

Frame Size A

PVWJ-011

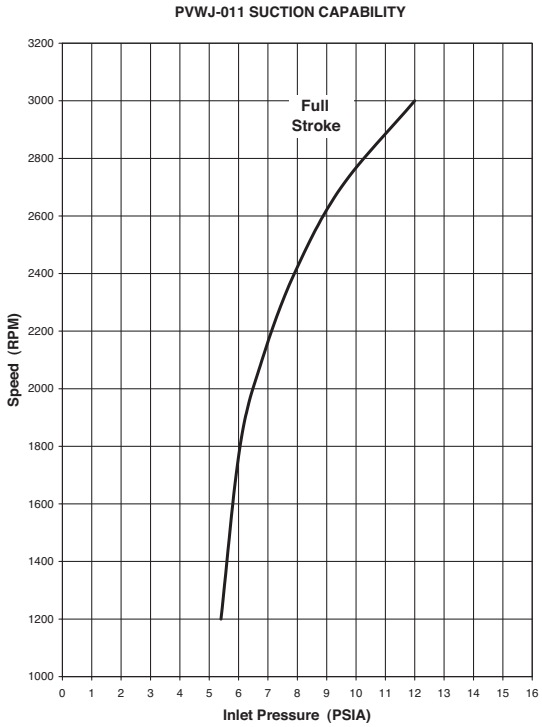

PVWJ-014

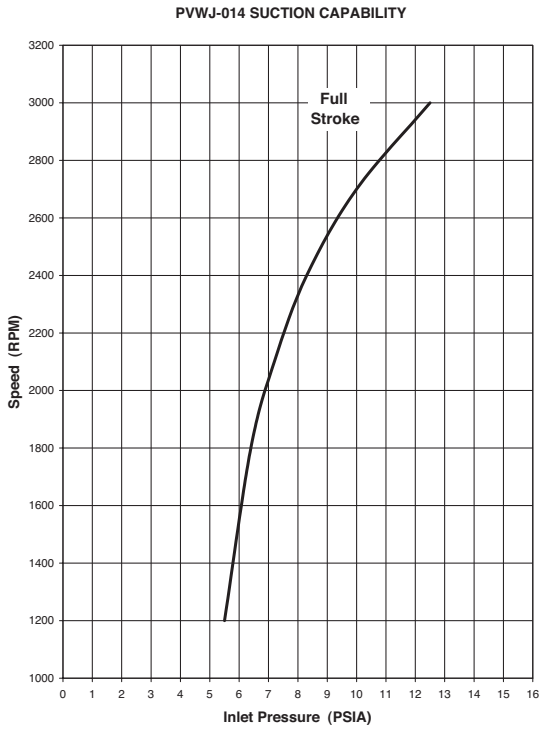

PVWJ-022

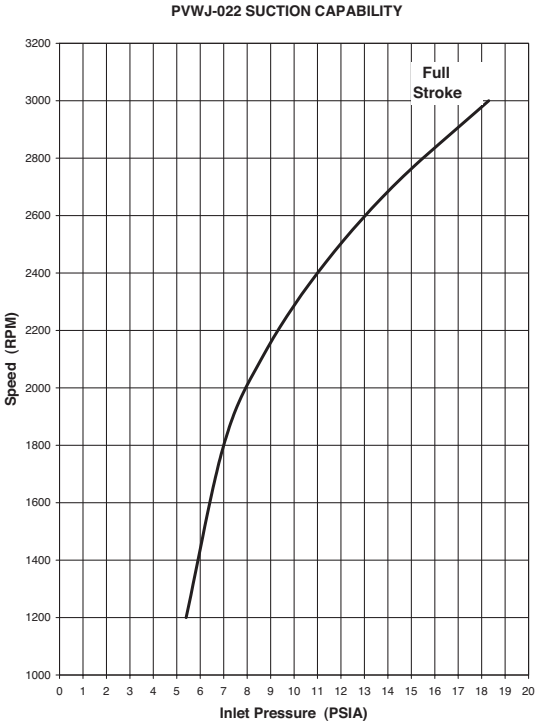

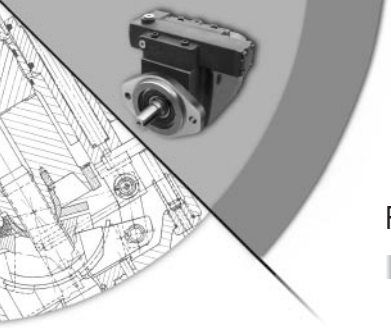

Inlet Suction Curves

Frame Size B

PVWJ-025

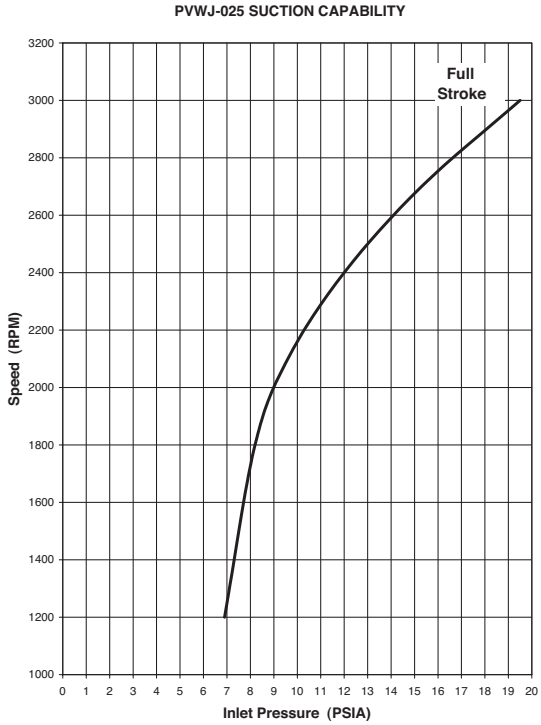

PVWJ-034

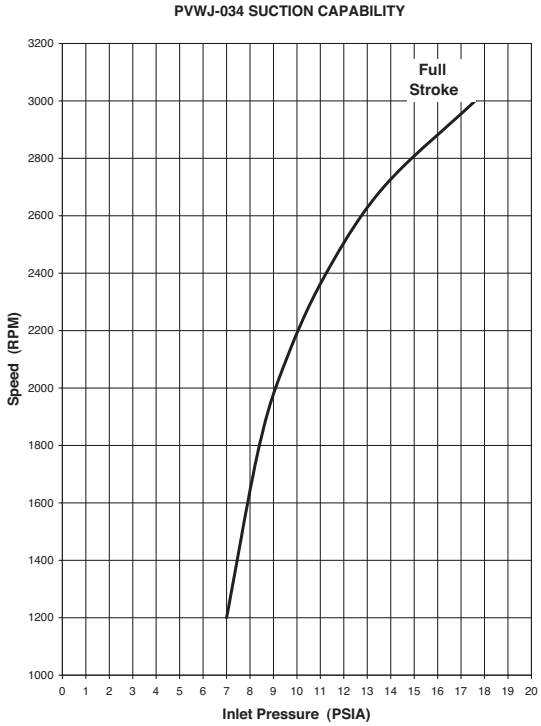

PVWJ-046

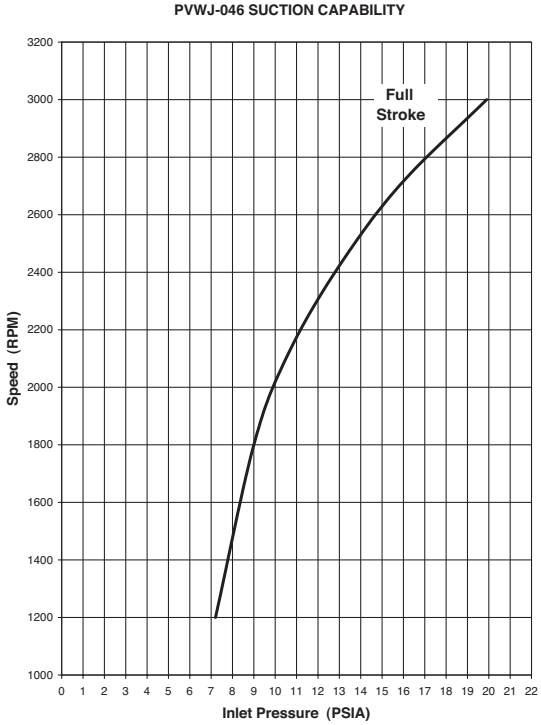

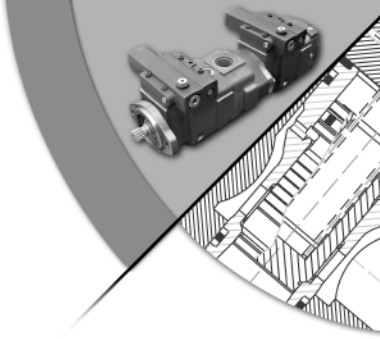

Frame Size C

PVWJ-064

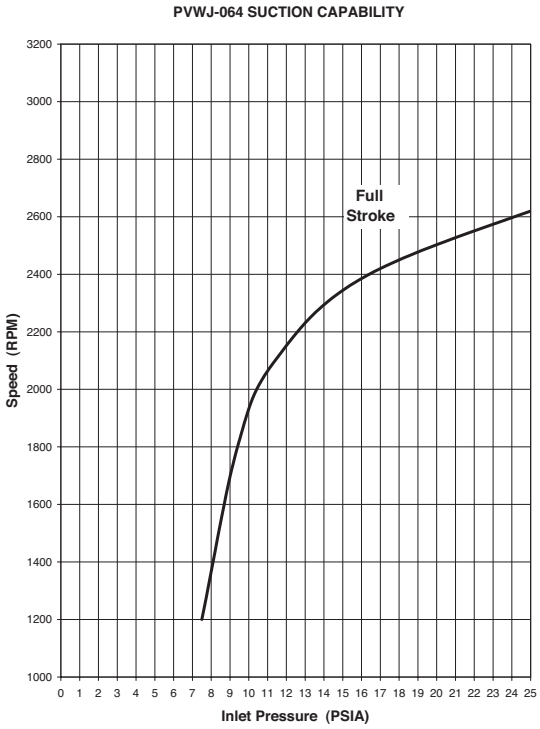

PVWJ-076

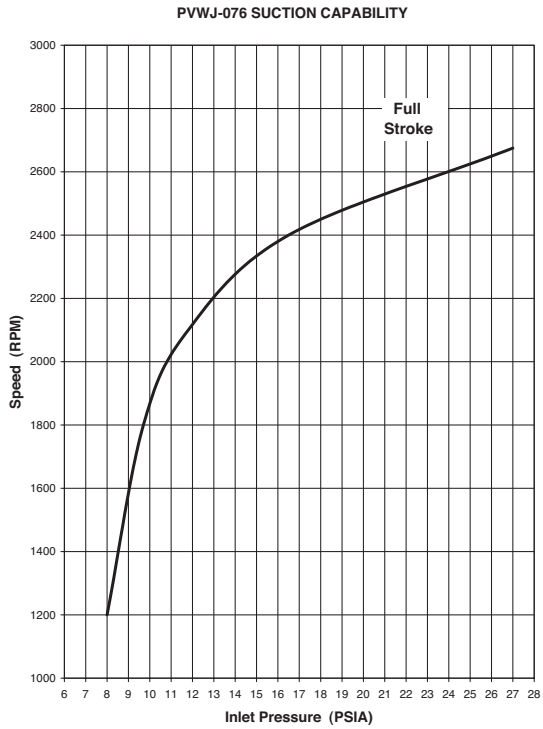

PVWJ-098

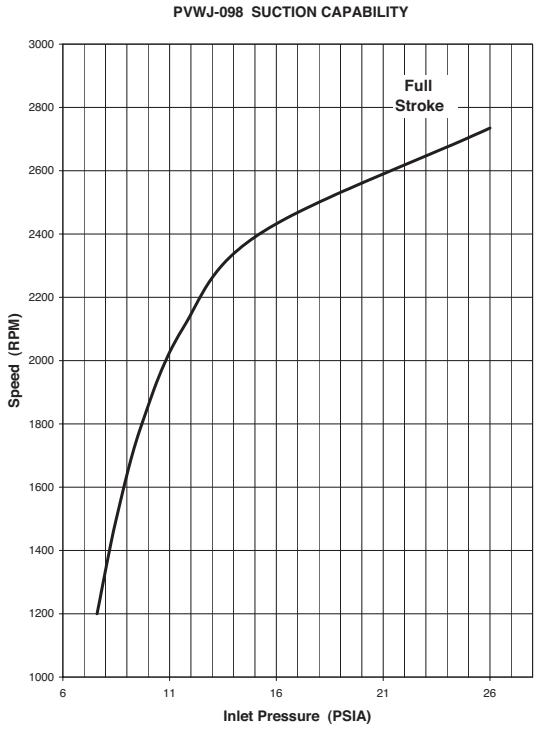

PVWJ-130

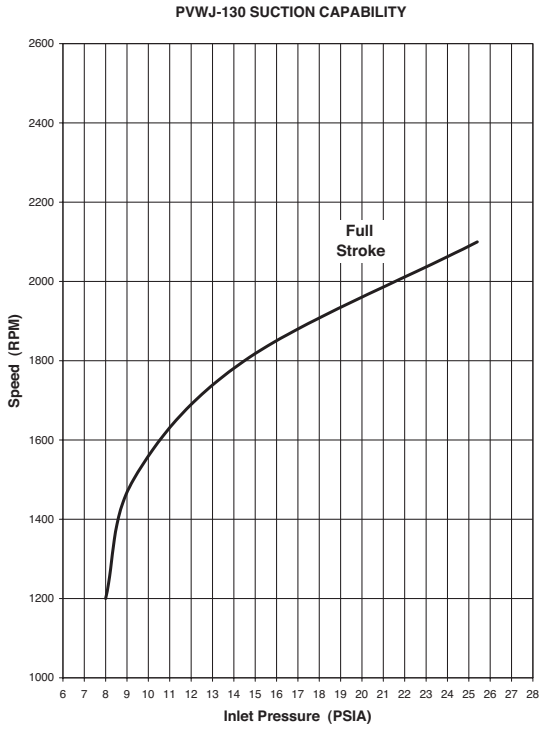

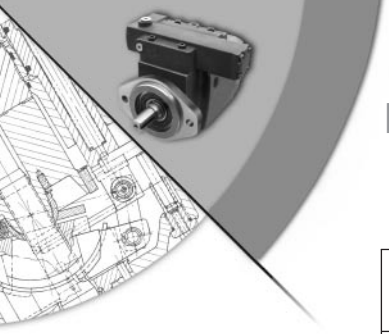

HOW TO ORDER

BLOCK NUMBER EXPLANATION	1	2	3	-	4	-	5	6	7	-	8	9	10	11	-	12	-	13a	13b	13c	13d	14	-	15	/	16	-	17
PVWJ Model Code EXAMPLE	P	V	WJ	-	098	-	A1	U	V	-	L	D	F	Y	-	P	-	1	N	N	/F	SN	-	AN	/	10	-	XXX

1 = UNIT
P = Pump

2 = TYPE
V = Variable

3 = DESIGN TYPE
WJ = Pump Series

4 = UNIT SIZE

011 = 10.8 cc/rev (0.66 cipr) 014 = 14.1 cc/rev (0.86 cipr) 022 = 22.1 cc/rev (1.35 cipr)	A Frame
025 = 25.4 cc/rev (1.55 cipr) 034 = 33.8 cc/rev (2.06 cipr) 046 = 46.4 cc/rev (2.83 cipr)	B Frame
064 = 63.6 cc/rev (3.88 cipr) 076 = 76.5 cc/rev (4.67 cipr) 098 = 98.3 cc/rev (6.00 cipr) 130 = 130.2 cc/rev (7.94 cipr)	C Frame

5 = DESIGN SERIES
A1= Current for all displacements

6 = DESIGN SERIES MODIFIER
U = SAE Connections & Mounting

7 = SHAFT & O-RING SEALS
V = Viton
P = EPR

8 = ROTATION
L = Left Hand (CCW)
R = Right Hand (CW)

9 = VALVE PLATE TYPE*
S = Rear Ported
G = Side Ported
D = Thru-Shaft w/Side-Ports
T = Top/Bottom Ported

10 = CONNECTION TYPE
A = SAE Straight Port*
F = SAE Flange
R = SAE Flange w/ Relief Valve

* All combinations of Valve Plate and Connection types not available. See Valve Plate Table below.

11 = SHAFT TYPE
See Shaft Table below.

12 = CONTROL TYPE
P = Pressure Compensating

13a = PRESSURE COMPENSATOR OPTIONS
1 = Single PC Setting (standard)
L = Low PC Setting
C = Single PC w/Soft Start, NO
K = Single PC w/Soft Start, NC

13b = SOLENOID VOLTAGE
N for Single & Low PC Setting
0 = 115/60 - 110/50 VAC
2 = 12 VDC

13c = CONNECTOR
N for Single & Low PC Setting
N = No Connector
R = .500 NPT w/o Lite
W = .500 NPT w/Lite
S = PG-11 w/o Lite
L = PG-11 w/Lite

13d = CONTROL MODIFIER
/F = Fixed Load Sense 170 PSI
/J = Adjustable Load Sense 100-220 PSI
/K = Adjustable Load Sense 225-350 PSI
Blank = None

14 = STROKE LIMITER OPTION
NN = None
SN = Adjustable Max. Volume Stop
SA = Adjustable Min. Volume Stop
SB = Adjustable Min. & Max. Volume Stops

15 = AUXILIARY ADAPTORS
(required for all thru-shaft units, leave blank for all rear & side ported units.
CP = Cover Plate
AN = SAE A Adaptor & Coupling
BN = SAE B Adaptor & Coupling
CN = SAE C Adaptor & Coupling
NN = No Adaptor or Coupling

16 = GEAR PUMPS
Blank = None
05 = 0.488 cipr
07 = 0.672 cipr
10 = 0.976 cipr
14 = 1.403 cipr
20 = 2.015 cipr

17 = SPECIAL PUMP MODIFIER
XXX = Special Pump Modifier (Factory Assigned)
Blank = Standard Unit

Valve Plate Table (X = Available)

	SA	GA	DA	SF	DF	DR	TA
-011	X	X	X				X
-014	X	X	X				X
-022	X	X	X				X
-025	X				X	X	
-034	X				X	X	
-046	X				X	X	
-064				X	X	X	
-076	X*				X	X	
-098	X*				X	X	
-130	X*				X	X	

* = SAE Flange on inlet, SAE Straight Thread Port on Outlet

Shaft Table

Shaft Code	PVWJ-011/ -014/-022	PVWJ-025/ -034/-046	PVWJ-064/-076/ -098/-130
Y	.75" Keyed	.875" Keyed	1.25" Keyed
B	.875" Keyed	1.00" Keyed	—
S	SAE A Spline	SAE B Spline	SAE C Spline
C	SAE B Spline	SAE B-B Spline	—
D**	SAE A Spline	SAE B Spline	SAE C Spline

** D shafts are "industrial" versions of S shafts

Oilgear

World Headquarters
The Oilgear Company
2300 South 51st Street Milwaukee, WI USA 53219
phone: 414/327-1700 fax: 414/327-0532
www.oilgear.com

For more information about your application or the products in this brochure, please contact your nearest Oilgear facility.

Oilgear PERFORMANCE ASSURANCE

AUSTRALIA
Oilgear Towler Australia Pty. Ltd.

BRAZIL
Oilgeardo Brazil Hydraulica Ltd.

CANADA
The Oilgear Company

FRANCE
Oilgear Towler S.A.

GERMANY
Oilgear Towler GmbH

INDIA
Oilgear Towler Polyhydron Pvt. Ltd.
Towler Automation Pvt. Ltd.

ITALY
Oilgear Towler S.r.l.

JAPAN
The Oilgear Japan Company

KOREA
Oilgear Towler Korea Co. Ltd.

MEXICO
Oilgear Mexicana S.A. de C.V.

SPAIN
Oilgear Towler S.A.

TAIWAN
Oilgear Towler Taiwan Co. Ltd.

UNITED KINGDOM
Oilgear Towler Ltd.

UNITED STATES OF AMERICA
The Oilgear Company

Bulletin 47085
Issued: August, 2006
Printed in USA